Off-grid Inverter

SUN-3K-OG02LP1-24-EU-AM1

SUN-3K-OG02LP1-EU-AM1

SUN-3.6K-OG02LP1-EU-AM1

SUN-5K-OG02LP1-EU-AM1

SUN-6K-OG02LP1-EU-AM1

User Manual

Contents

1. Safety Introductions 01-02
2. Product instructions 02-05
2.1 Product Overview
2.2 Product Size
2.3 Product Features
2.4 Basic System Architecture
3. Installation 06-21
3.1 Parts list
3.2 Product handling requirements
3.3 Mounting instructions
3.4 Battery connection
3.5 Grid connection and backup load connection
3.6 PV Connection
3.7 Earth Connection(mandatory)
3.8 WIFI Connection
3.9 Wiring System for Inverter
3.10 Typical application diagram of diesel generator
3.11 Single phase parallel connection diagram
3.12 Three phase Parallel Inverter
4. OPERATION 22
4.1 Power ON/OFF
4.2 Operation and Display Panel
5. LCD Display Icons 23-38
5.1 Main Screen
5.2 Solar Power Curve
5.3 Setting Menu
5.4 Basic Setup Menu
5.5 Battery Setup Menu
5.6 Grid Setup Menu
5.7 Gen PORT USE Setup Menu
5.8 Work Mode Setup Menu
5.9 Advanced Function Setup Menu
6. Mode 39-40
7. Fault information and processing 40-43
8. Limitation of Liability 43
9. Datasheet 44-45
10. Appendix I 46

About This Manual

The manual mainly describes the product information, guidelines for installation, operation and maintenance. The manual cannot include complete information about the photovoltaic (PV) system.

How to Use This Manual

Read the manual and other related documents before performing any operation on the inverter. Documents must be stored carefully and be available at all times.

Contents may be periodically updated or revised due to product development. The information in this manual is subject to change without notice. The latest manual can be acquired via service@deye.com.cn

1. Safety Introductions

Labels description

Label	Description
	Caution, risk of electric shock symbol indicates important safety instructions, which if not correctly followed, could result in electric shock.
	The DC input terminals of the inverter must not be grounded.
	Surface high temperature, Please do not touch the inverter case.
	The AC and DC circuits must be disconnected separately, and the maintenance personnel must wait for 5 minutes before they are completely powered off before they can start working.
	CE mark of conformity
	Please read the instructions carefully before use.
	Symbol for the marking of electrical and electronics devices according to Directive 2002/96/EC. Indicates that the device, accessories and the packaging must not be disposed as unsorted municipal waste and must be collected separately at the end of the usage. Please follow Local Ordinances or Regulations for disposal or contact an authorized representative of the manufacturer for information concerning the decommissioning of equipment.

· This chapter contains important safety and operating instructions. Read and keep this manual for future reference.
· Before using the inverter, please read the instructions and warning signs of the battery and corresponding sections in the instruction manual.
· Do not disassemble the inverter. If you need maintenance or repair, take it to a professional service center.
· Improper reassembly may result in electric shock or fire.
· To reduce risk of electric shock, disconnect all wires before attempting any maintenance or cleaning. Turning off the unit will not reduce this risk.
· Caution: Only qualified personnel can install this device with battery.
· Never charge a frozen battery.
· For optimum operation of this inverter, please follow required specification to select appropriate cable size. It is very important to correctly operate this inverter.
· Be very cautious when working with metal tools on or around batteries. Dropping a tool may cause a spark or short circuit in batteries or other electrical parts, even cause an explosion.
· Please strictly follow installation procedure when you want to disconnect AC or DC terminals. Please refer to "Installation" section of this manual for the details.
· Grounding instructions - this inverter should be connected to a permanent grounded wiring system. Be sure to comply with local requirements and regulation to install this inverter.
· Never cause AC output and DC input short circuited. Do not connect to the mains when DC input short circuits.

2. Product Introductions

This is a multifunctional inverter, combining functions of inverter, solar charger and battery charger to offer uninterruptible power support with portable size. Its comprehensive LCD display offers user configurable and easy accessible button operation such as battery charging, AC/solar charging, and acceptable input voltage based on different applications.

2.1 Product Overview

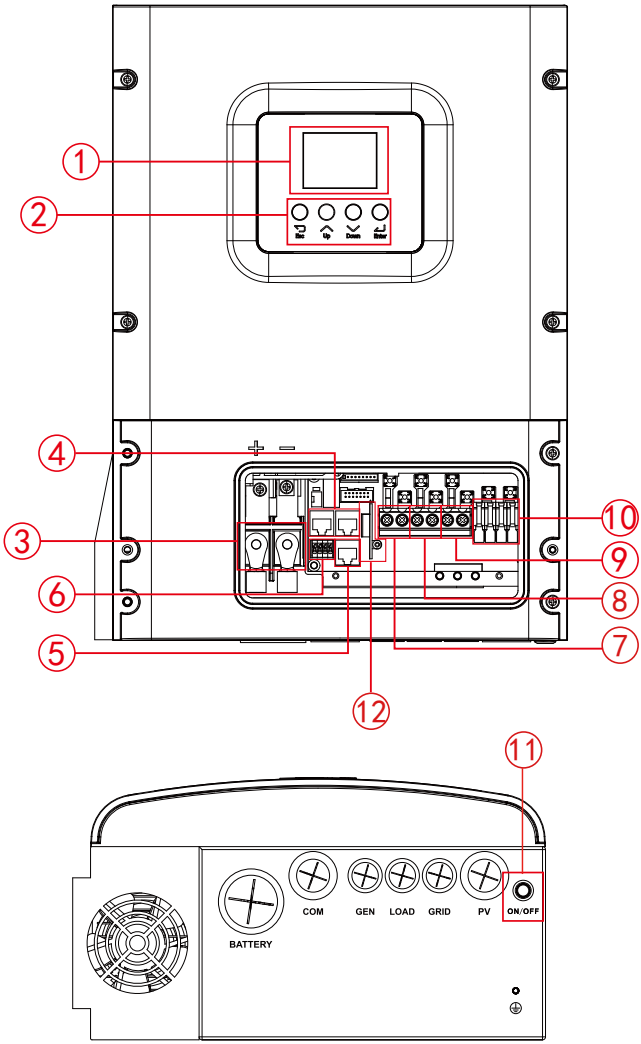

1: LCD display

2: Function Buttons

3: Battery input connectors

4: Parallel Port

5: BMS 485/CAN port

6: Function port

7: Generator

8: Load

9: Grid

10: PV input

11: Power on/off button

12: Built-in Wi-Fi module (optional)*

*Note: This component is optional, please confirm whether you need it before placing an order.

2.2 Product Size

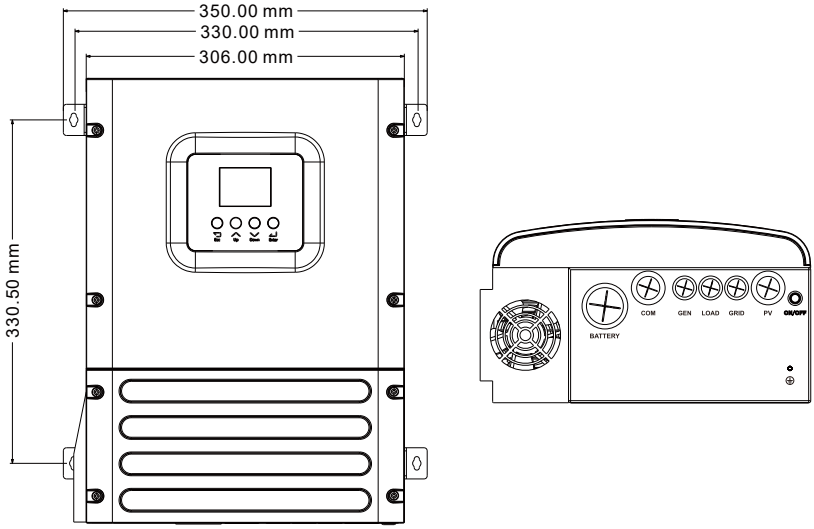

Inverter Size

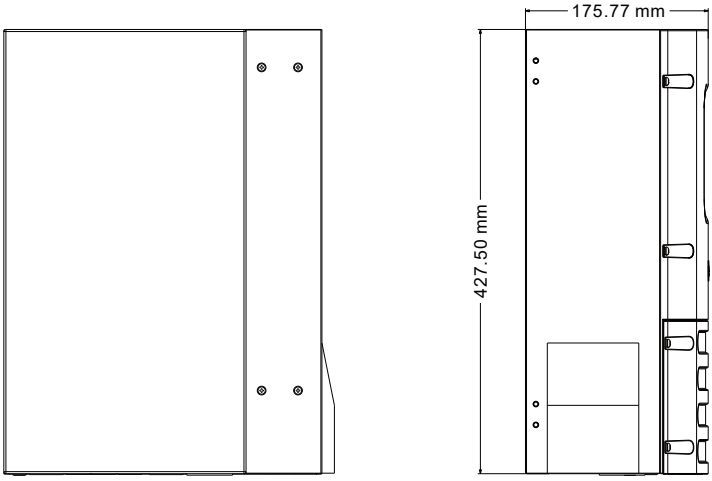

2.3 Product Features

- Self-consumption.
- Auto restart while AC is recovering.
- Programmable multiple operation modes: On grid, off grid and UPS.
- Configurable battery charging current based on applications by LCD setting.
- Compatible with voltage power or generator power.
- Overload/over temperature/short circuit protection.
- With limit function, prevent excess power overflow to the grid.
- Supporting remote monitoring and built in one MPP tracker.

2.4 Basic System Architecture

The following illustration shows basic application of this inverter.
It also includes following devices to have a Complete running system.
- Generator or Utility
- PV modules

Consult with your system integrator for other possible system architectures depending on your requirements.
This inverter can power all kinds of appliances in home or office environment, including motor type appliances such as refrigerator and air conditioner.

The generator interface should not be connected to both the generator and the smart load simultaneously. The generator only can be connected in stand-alone scenario. When the grid be connected, the generator should not be connected simultaneously.

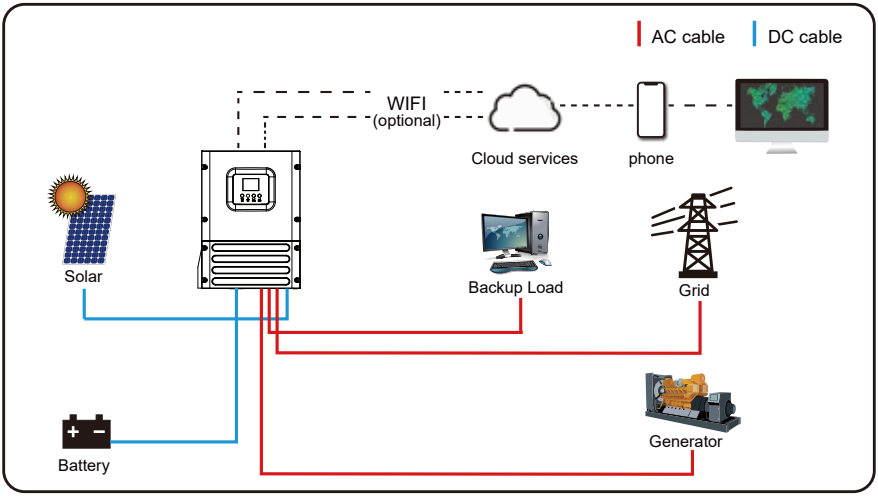

Note: When using the GEN port as the "Generator Input" port, the relays on the grid port and GEN port of the inverter will not be closed simultaneously. The relays on the GEN port will only be closed when the inverter is running in off-grid mode.

3. Installation

3.1 Parts List

Check the equipment before installation. Please make sure nothing is damaged in the package. You should have received the items in the following package:

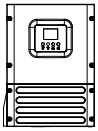

Inverter
x1

Wall mounting hanger
x4

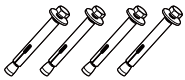

Stainless steel
anti-collision bolt M6*60
x4

Stainless steel mounting
screws M4*12
x10

Parallel communication
cable x1

User manual x1

3.2 Product handling requirements

Lift the inverter out of the packing box and transport it to designated installation location.

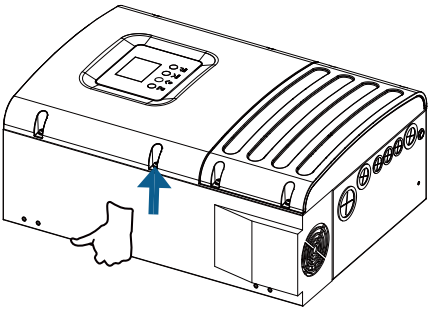

transport

CAUTION:

Improper handling may cause personal injury!

• Arrange an appropriate number of personnel to carry the inverter according to its weight, and installation personnel should wear protective equipment such as anti-impact shoes and gloves.

• Placing the inverter directly on a hard ground may cause damage to its metal enclosure. Protective materials such as sponge pad or foam cushion should be placed underneath the inverter.

• Move the inverter by one or two people or by using a proper transport tool.

• Move the inverter by holding the handles on it. Do not move the inverter by holding the terminals.

3.3 Mounting instructions

Installation Precaution

This inverter is designed for outdoor use(IP65), Please make sure the installation site meets below conditions:

· Not in direct sunlight
· Not in areas where highly flammable materials are stored.
· Not in potential explosive areas.
· Not in the cool air directly.
· Not near the television Antenna or antenna cable.
· Not higher than altitude of about 3000 meters above sea level.
· Not in environment of precipitation or humidity(>95%)

Please AVOID direct sunlight, rain exposure, snow laying up during installation and operation. Before connecting all wires, please take off the metal cover by removing screws as shown below:

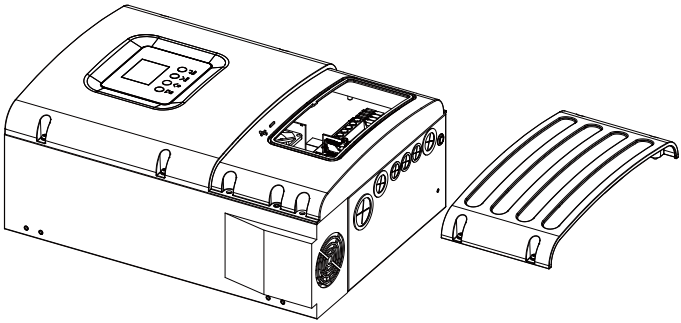

Installations Tools

Installation tools can refer to the following recommended ones. Also, use other auxiliary tools on site.

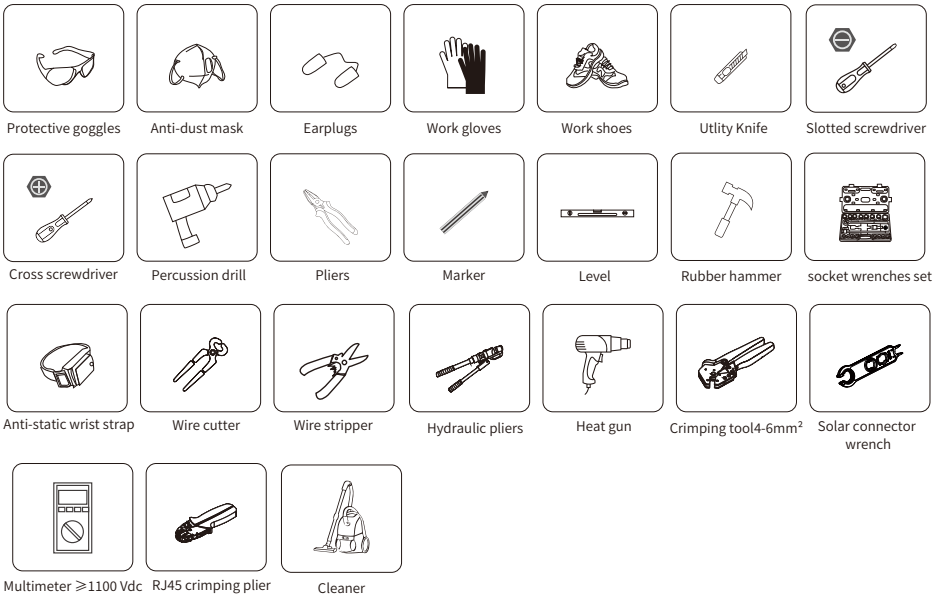

Considering the following points before selecting where to install:

· Please select a vertical wall with load-bearing capacity for installation, suitable for installation on concrete or other non-flammable surfaces,installation is shown below.
· Install this inverter at eye level in order to allow the LCD display to be read at all times.
· The ambient temperature is recommeded to be between -40~60℃ to ensure optimal operation.
· Be sure to keep other objects and surfaces as shown in the diagram to guarantee sufficient heat dissipation and have enough space for removing wires.

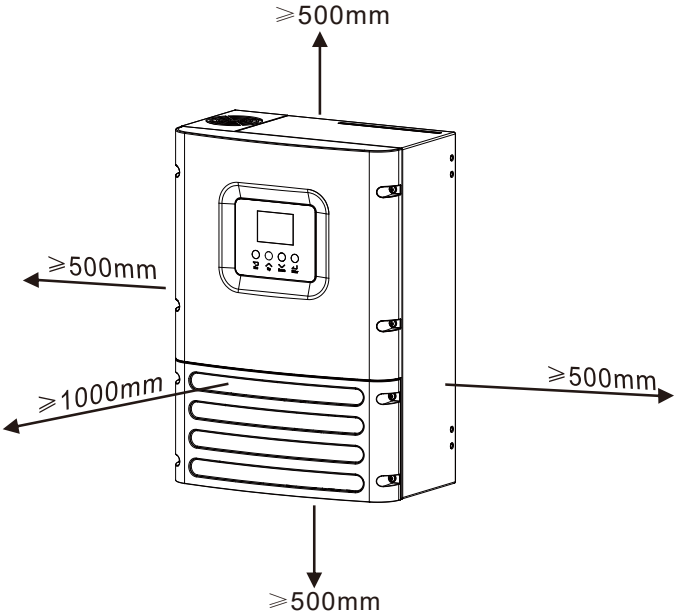

For proper air circulation to dissipate heat, allow a clearance of approx. 50cm to the side and approx. 50cm above and below the unit. And 100cm to the front.

Mounting the inverter

Remember that this inverter is heavy! Please be careful when lifting out from the package.
1. Take out 4 hinger and corresponding screws from the accessory package, and fix them to the corresponding positions on both sides of the inverter.
2. Place the inverter at the planned installation location on the wall and mark the required drilling position at the hinger opening with a marker pen.
3. Drill 4 holes of 62-70mm depth at the marked position using a 8mm drill bit.
4. Use a proper hammer to fit the expansion bolts into the holes, and unscrew the nuts of these expansion bolts.

5. Carry the inverter and holding it,align the hole of the hinge with the expansion bolts and screw the nuts of expansion bolts.
6. Fasten the nuts of expansion bolts to finish the mounting.

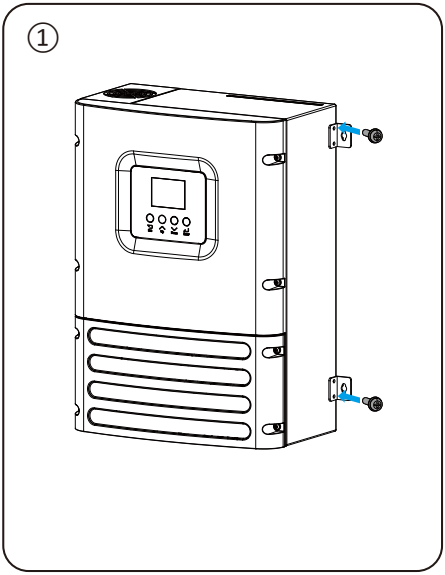

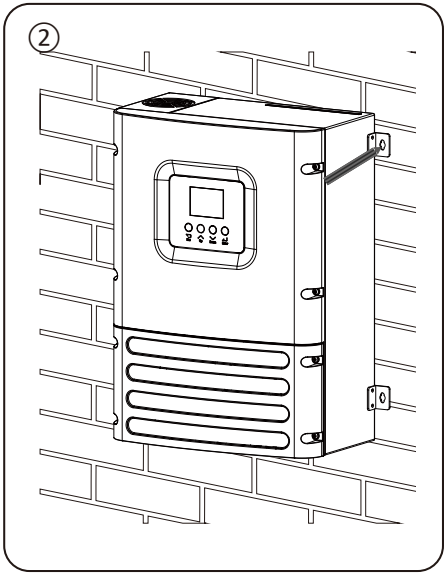

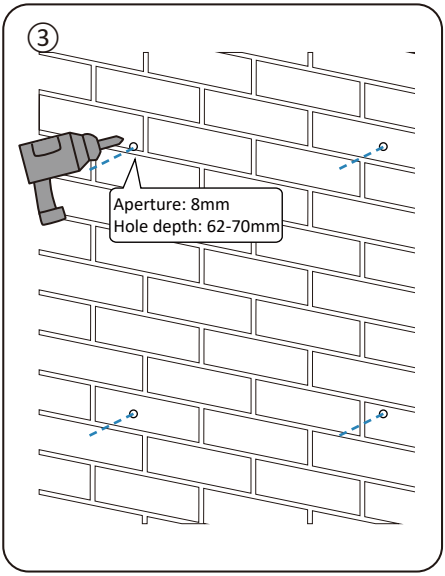

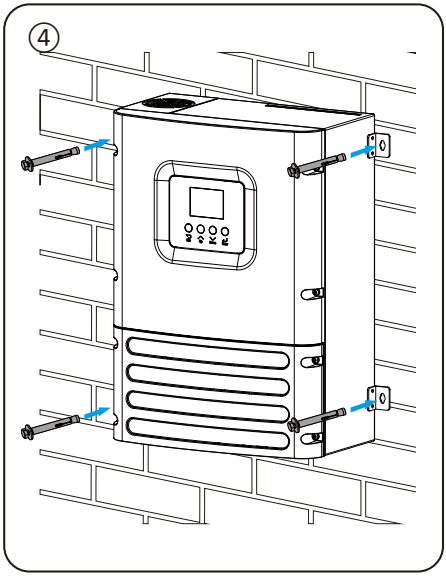

3.4 Battery connection

For safe operation and compliance, a separate DC over-current protector or disconnect device is required between the battery and the inverter. In some applications, switching devices may not be required but over-current protectors are still required. Refer to the typical amperage in the table below for the required fuse or circuit breaker size.

Model	*Wire Size*	*Cable(mm²)*
3kW-24	0AWG	50
3kW	4AWG	16
3.6kW	2AWG	25
5kW	1AWG	35
6kW	0AWG	50

Chart 3-2 Cable size

All wiring must be performed by a professional person.

Connecting the battery with a suitable cable is important for safe and efficient operation of the system. To reduce the risk of injury, refer to Chart 3-2 for recommended cables.

Please follow below steps to implement battery connection:

1. Please choose a suitable battery cable with correct connector which can well fit into the battery terminals.
2. Use a suitable screwdriver to unscrew the bolts and fit the battery connectors in, then fasten the bolt by the screwdriver, make sure the bolts are tightened with torque of 5.2 N.m in clockwise direction.
3. Make sure polarity at both the battery and inverter is correctly connected.

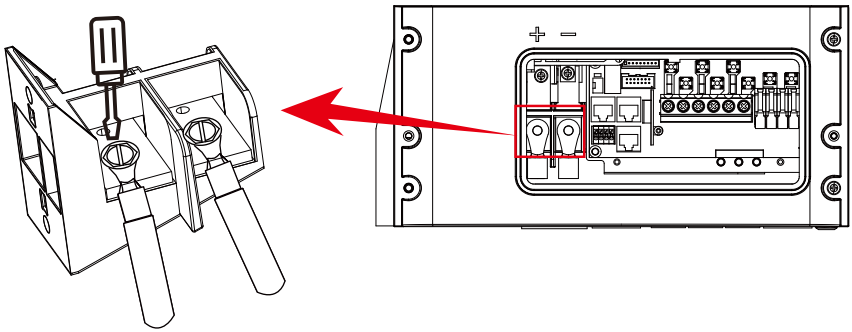

4. In case of children touch or insects go into the inverter, Please make sure the inverter connector is fasten to waterproof position by twist it clockwise.

Installation must be performed with care.

Before making the final DC connection or closing DC breaker/disconnect, be sure positive(+) must be connect to positive(+) and negative(-) must be connected to negative(-). Reverse polarity connection on battery will damage the inverter.

3.4.1 Function port definition

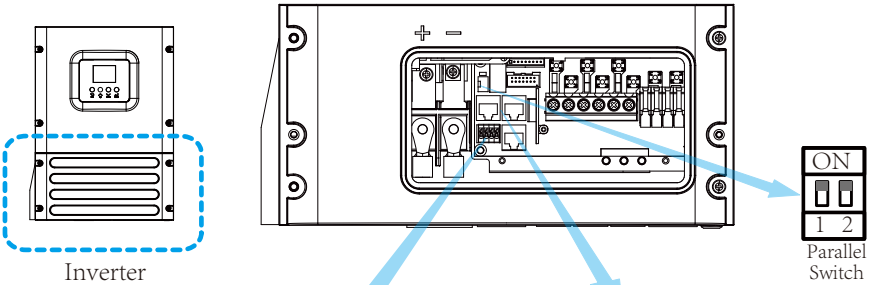

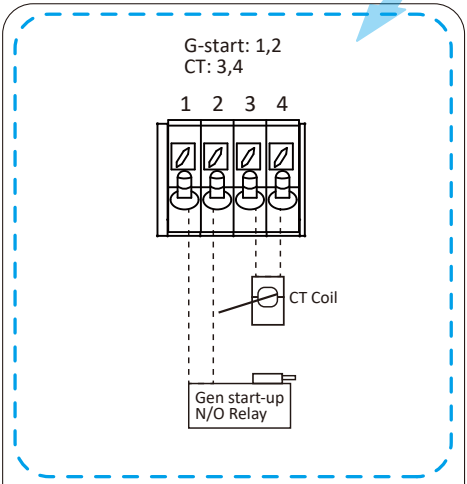

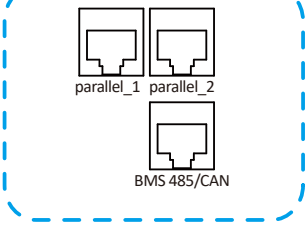

Parallel 1: Parallel communication port 1 (CAN interface).

Parallel 2: Parallel communication port 2 (CAN interface).

BMS 485/CAN: For battery communication.

G-start(1,2): dry contact signal for startup the diesel generator.
When the "GEN signal" is active, the open contact (G-start) will switch on (no voltage output).

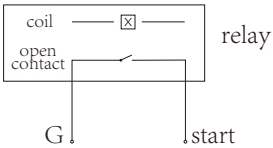

G-start

(diesel generator startup signal)

CT(3,4): current transformer for "zero export to CT" mode.

Parallel Switch: Parallel communication resistor. If the number of inverters in the parallel system is less than or equal to 6, all inverter's DIP switch (1&2) need be ON position. If the number of inverters in parallel system exceeds 6, the main 6pcs inverter's DIP switch needs to be ON position. And the other inverter DIP switch (1&2) needs to be OFF position.

3.5 Grid connection and backup load connection

· Before connecting to the grid, a separate AC breaker must be installed between the inverter and the grid, and also between the backup load and the inverter. This will ensure the inverter can be securely disconnected during maintenance and fully protected from over current. For the 3/3.6/5/6kW model, the recommended AC breaker for backup load is 40A. For the 3/3.6/5/6kW model, the recommended AC breaker for grid is 40A.

· There are three terminal blocks with "Grid" "Load"and "GEN" markings. Please do not misconnect input and output connectors.

Note:
In final installation,breaker certified according to IEC 60947-1 and IEC 60947-2 shall be installed with the equipment.

All wiring must be performed by a qualified personnel.It is very important for system safety and efficient operation to use appropriate cable for AC input connection. To reduce risk of injury, please use the proper recommended cable as below.

Grid connection and backup load connection (Copper wires)

Model	*Wire Size*	*Cable(mm^2)*	*Torque value(max)*
3kW	10AWG	4.0	1.2Nm
3.6/5/6kW	8AWG	6.0	1.2Nm

Grid connection and backup load connection (Copper wires) (Bypass)

Model	*Wire Size*	*Cable(mm^2)*	*Torque value(max)*
3/3.6/5/6kW	8AWG	6.0	1.2Nm

Chart 3-3 Recommended Size for AC wires

Please follow below steps to implement AC input/output connection:

1. Before making Grid, load and Gen port connection, be sure to turn off AC breaker or disconnector first.
2. Remove insulation sleeve 10mm length, unscrew the bolts, insert the wires according to polarities indicated on the terminal block and tighten the terminal screws. Make sure the connection is complete.

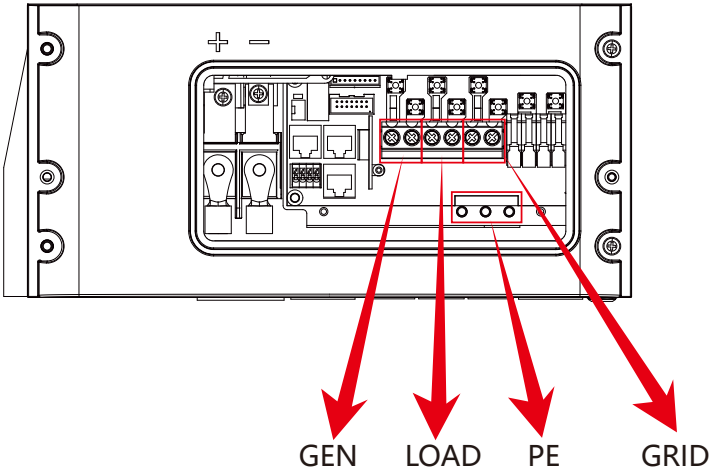
+
−
GEN
LOAD
PE
GRID

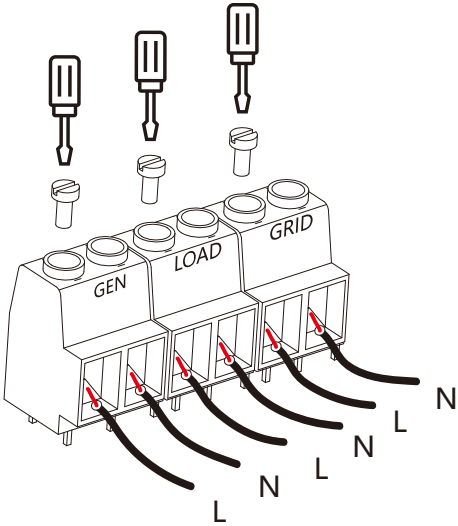
GEN
LOAD
GRID
L
N
L
N
L
N

Be sure that AC power source is disconnected before attempting to wire it to the unit.

3. Then, insert AC output wires according to polarities indicated on the terminal block and tighten terminal. Be sure to connect corresponding N wires and PE wires to related terminals as well.
4. Make sure the wires are securely connected.
5. Appliances such as air conditioner are required at least 2-3 minutes to restart because it is required to have enough time to balance refrigerant gas inside of circuit. If a power shortage occurs and recovers in short time, it will cause damage to your connected appliances. To prevent this kind of damage, please check manufacturer of air conditioner if it is equipped with time-delay function before installation. Otherwise, this inverter will trigger overload fault and cut off output to protect your appliance but sometimes it still causes internal damage to the air conditioner

3.6 PV Connection

Before connecting to PV modules, please install a separately DC circuit breaker between inverter and PV modules. It is very important for system safety and efficient operation to use appropriate cable for PV module connection. To reduce risk of injury, please use the proper recommended cable size as below.

Model	*Wire Size*	*Cable(mm^2)*
3/3.6/5/6kW	8AWG	6.0

Chart 3-4 Cable size

To avoid any malfunction, do not connect any PV modules with possible current leakage to the inverter. For example, grounded PV modules will cause current leakage to the inverter. When using PV modules, please ensure the PV+ & PV- of solar panel is not connected to the system ground bar.

It is requested to use PV junction box with surge protection. Otherwise, it will cause damage on inverter when lightning occurs on PV modules.

3.6.1 PV Module Selection:

When selecting proper PV modules, please be sure to consider below parameters:

1) Open circuit Voltage (Voc) of PV modules not exceeds max. PV array open circuit voltage of inverter.
2) Open circuit Voltage (Voc) of PV modules should be higher than min. start voltage.
3) The PV modules used to connected to this inverter shall be Class A rating certified according to IEC 61730.

Inverter Model	SUN-3K-OG02LP1-24-EU-AM1	SUN-3K-OG02LP1-EU-AM1	SUN-3.6K-OG02LP1-EU-AM1	SUN-5K-OG02LP1-EU-AM1	SUN-6K-OG02LP1-EU-AM1
PV Input Voltage	370V (125V-450V)				
MPPT Voltage Range	150V-425V				
No. of MPP Trackers	1				
No. of Strings MPP Tracker	1				

Chart 3-5

3.6.2 PV Module Wire Connection:

Please follow below steps to implement PV module connection:

1. Remove insulation sleeve 10 mm for positive and negative conductors.
2. Suggest to put bootlace ferrules on the end of positive and negative wires with a proper crimping tool.
3. Check correct polarity of wire connection from PV modules and PV input connectors. Then, connect positive pole (+) of connection wire to positive pole (+) of PV input connector. Connect negative pole (-) of connection wire to negative pole(-)of PV input connector. Close the switch and make sure the wires are tightly fixed.

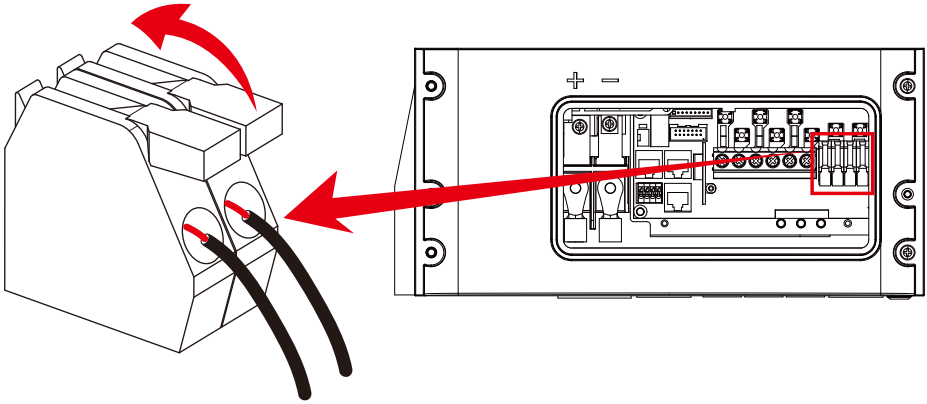

3.7 Earth Connection(mandatory)

Ground cable shall be connected to ground plate on grid side, this prevents electric shock if the original protective conductor fails.

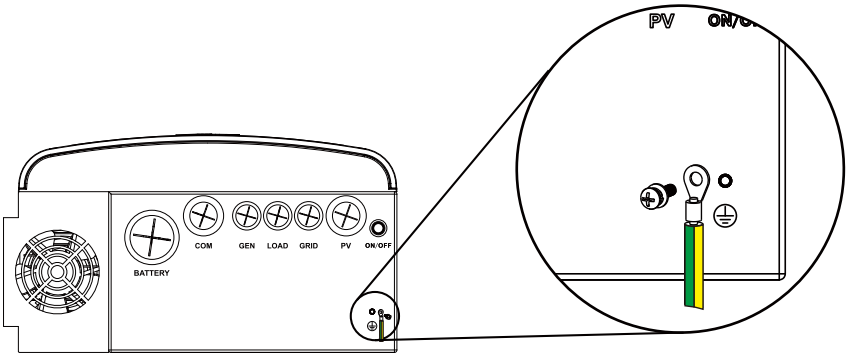

Earth connection (Copper wires)

Model	*Wire Size*	*Cable(mm²)*	*Torque value(max)*
3kW	10AWG	4.0	1.2Nm
3.6/5/6kW	8AWG	6.0	1.2Nm

Earth connection (Copper wires) (Bypass)

Model	*Wire Size*	*Cable(mm²)*	*Torque value(max)*
3/3.6/5/6kW	8AWG	6.0	1.2Nm

Warning:
Inverter has built-in leakage current detection circuit, The type A RCD can be connected to the inverter for protection according to the local laws and regulations. If an external leakage current protection device is connected, its operating current must be equal to 300 mA or higher, otherwise inverter may not work properly.

3.8 WIFI Connection

The built-in Wi-Fi module is an optional feature, not a standard component.

3.9 Wiring System for Inverter

This diagram is an example for grid systems without special requirements on electrical wiring connection.
Note: The load PE line and earthing bar must be grounded properly and effectively.
Otherwise the back-up function may be abnormal when the grid fails.

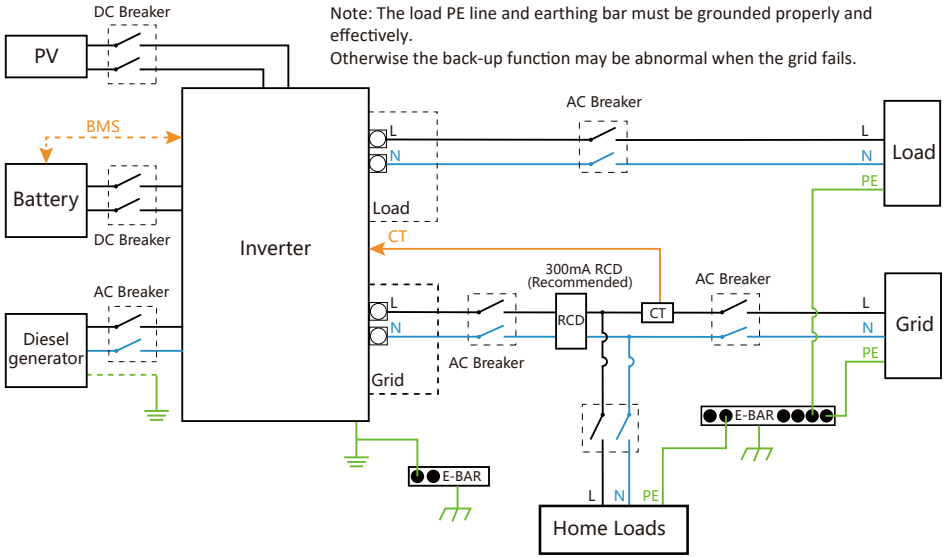

This diagram is an example for application that Neutral connects together with PE in distribution box.
Such as: Australia, New Zealand,etc. (Please follow local wiring regulations!)

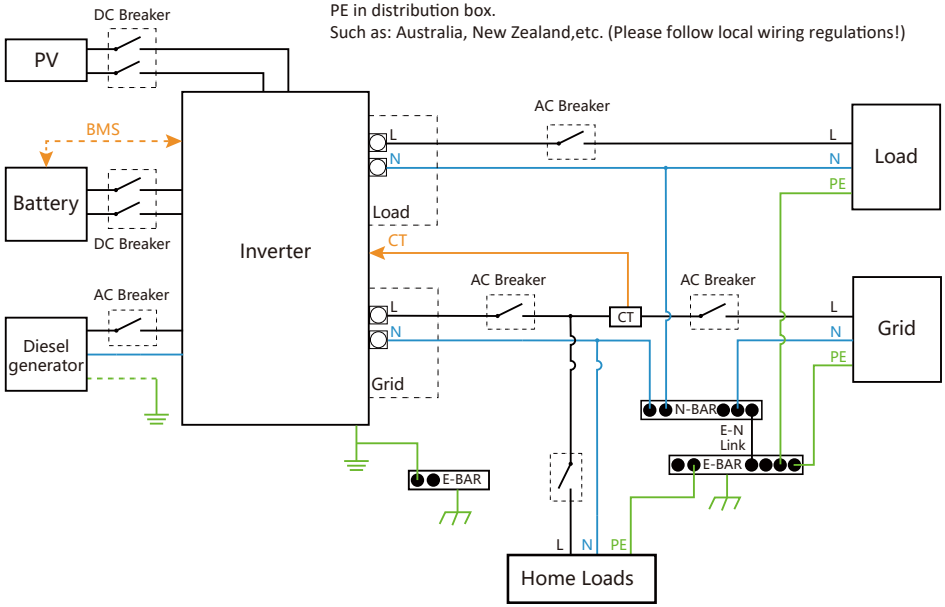

3.10 Typical application diagram of diesel generator

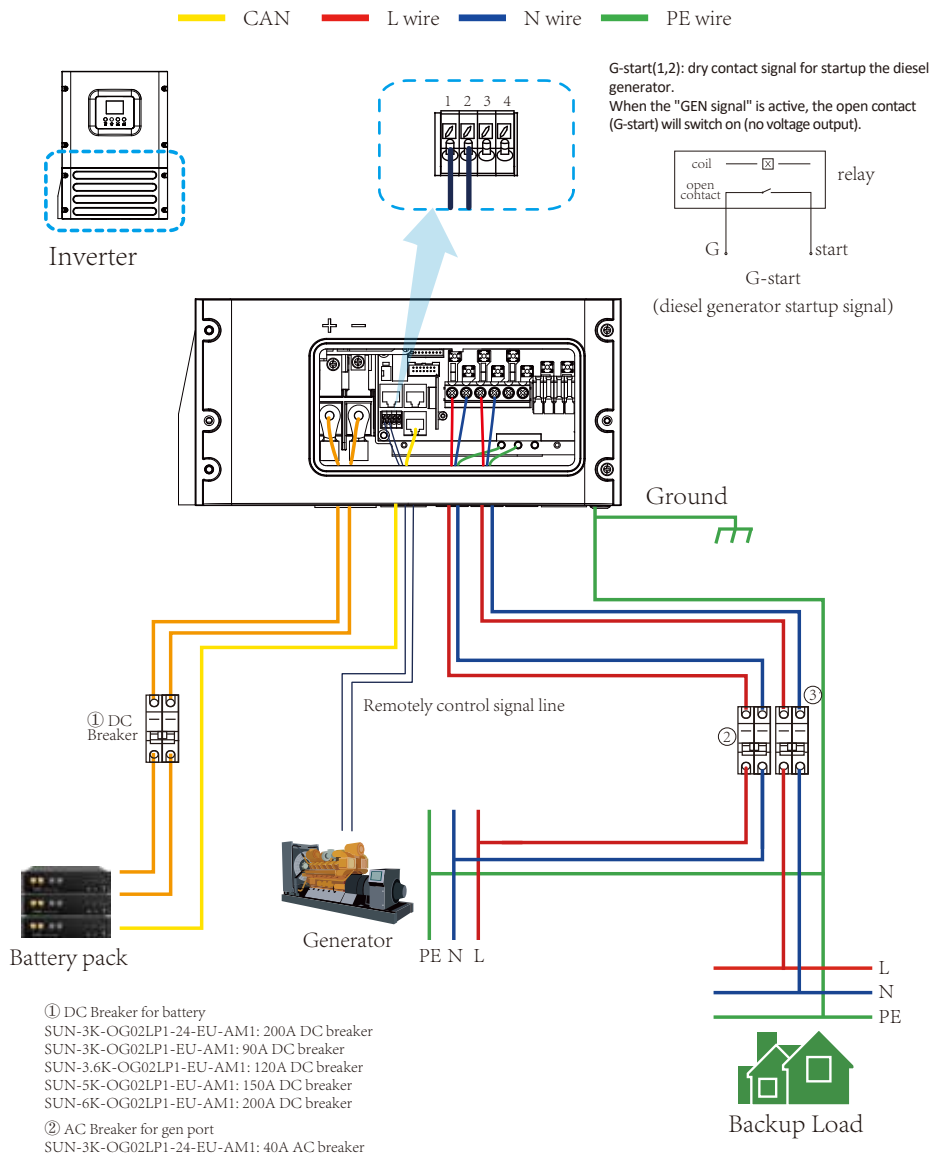

① DC Breaker for battery
SUN-3K-OG02LP1-24-EU-AM1: 200A DC breaker
SUN-3K-OG02LP1-EU-AM1: 90A DC breaker
SUN-3.6K-OG02LP1-EU-AM1: 120A DC breaker
SUN-5K-OG02LP1-EU-AM1: 150A DC breaker
SUN-6K-OG02LP1-EU-AM1: 200A DC breaker

② AC Breaker for gen port
SUN-3K-OG02LP1-24-EU-AM1: 40A AC breaker
SUN-3K-OG02LP1-EU-AM1: 40A AC breaker
SUN-3.6K-OG02LP1-EU-AM1: 40A AC breaker
SUN-5K-OG02LP1-EU-AM1: 40A AC breaker
SUN-6K-OG02LP1-EU-AM1: 40A AC breaker

③ AC Breaker for backup load port
SUN-3K-OG02LP1-24-EU-AM1: 40A AC breaker
SUN-3K-OG02LP1-EU-AM1: 40A AC breaker
SUN-3.6K-OG02LP1-EU-AM1: 40A AC breaker
SUN-5K-OG02LP1-EU-AM1: 40A AC breaker
SUN-6K-OG02LP1-EU-AM1: 40A AC breaker

3.11 Single phase parallel connection diagram

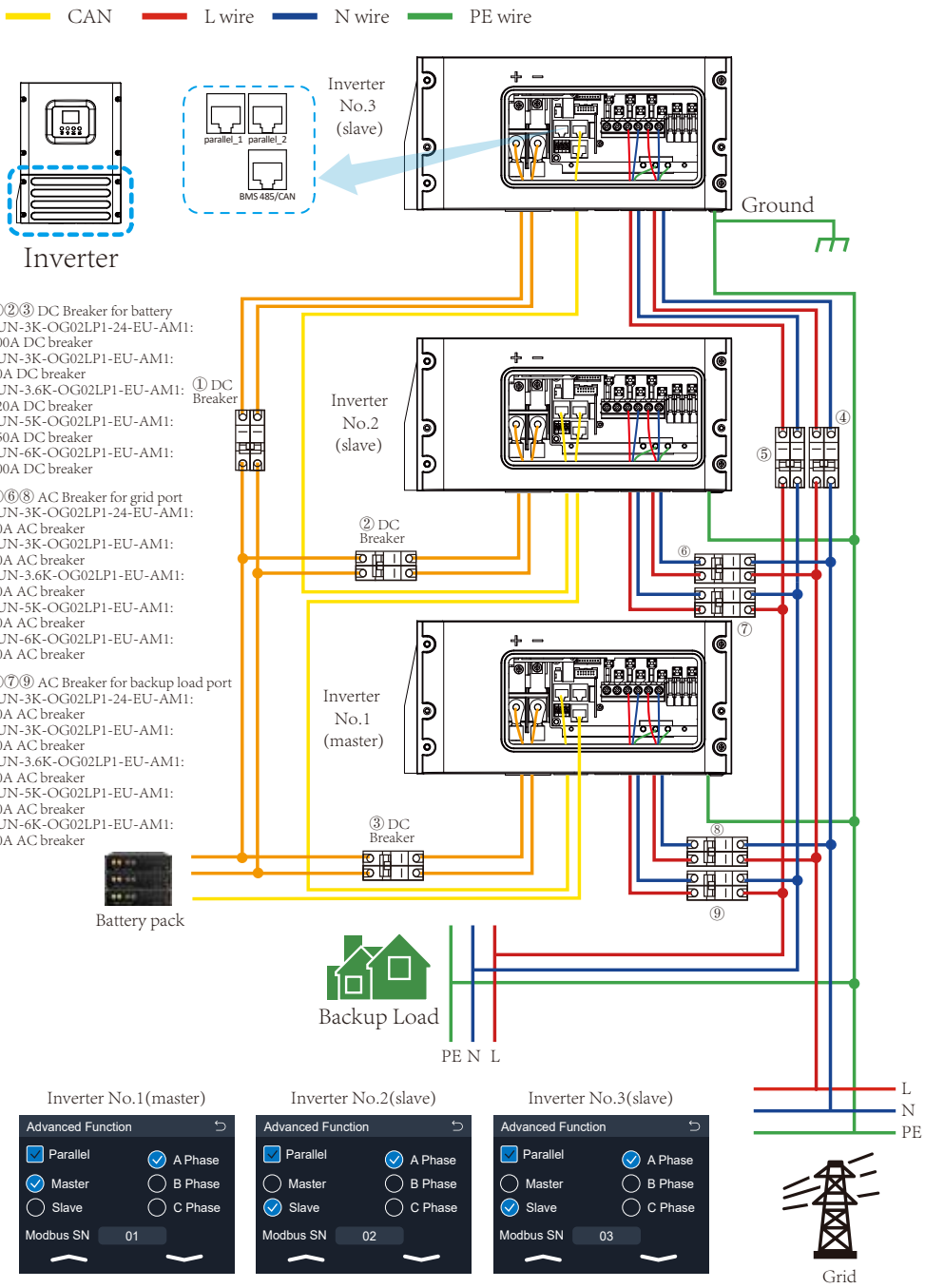

3.12 Three phase Parallel Inverter

①②③ DC Breaker for battery
SUN-3K-OG02LP1-24-EU-AM1: 200A DC breaker
SUN-3K-OG02LP1-EU-AM1: 90A DC breaker
SUN-3.6K-OG02LP1-EU-AM1: 120A DC breaker
SUN-5K-OG02LP1-EU-AM1: 150A DC breaker
SUN-6K-OG02LP1-EU-AM1: 200A DC breaker

⑤ AC Breaker for grid port
SUN-3K-OG02LP1-24-EU-AM1: 40A AC breaker
SUN-3K-OG02LP1-EU-AM1: 40A AC breaker
SUN-3.6K-OG02LP1-EU-AM1: 40A AC breaker
SUN-5K-OG02LP1-EU-AM1: 40A AC breaker
SUN-6K-OG02LP1-EU-AM1: 40A AC breaker

④ AC Breaker for backup load port
SUN-3K-OG02LP1-24-EU-AM1: 40A AC breaker
SUN-3K-OG02LP1-EU-AM1: 40A AC breaker
SUN-3.6K-OG02LP1-EU-AM1: 40A AC breaker
SUN-5K-OG02LP1-EU-AM1: 40A AC breaker
SUN-6K-OG02LP1-EU-AM1: 40A AC breaker

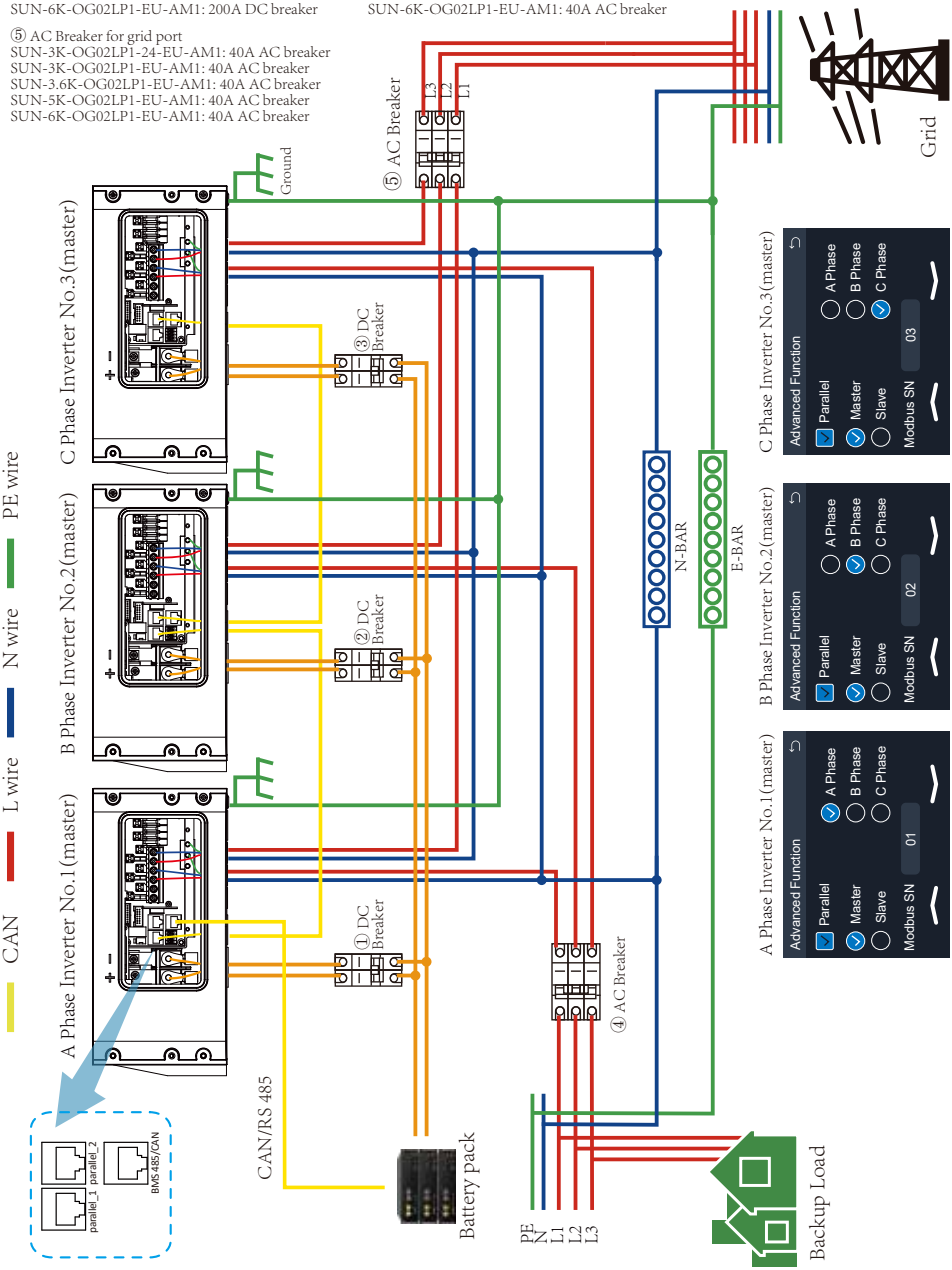

4. OPERATION

4.1 Power ON/OFF

Once the unit has been properly installed and the batteries are connected well, simply press On/Off button(located on the bottom of the case) to turn on the unit. When system without battery connected, but connect with either PV or grid, and ON/OFF button is switched off, LCD will still light up(Display will show OFF), In this condition, when switch on ON/OFF button and select NO battery, system can still work.

4.2 Operation and Display Panel

The operation and display panel, shown in below chart, is on the front panel of the inverter. It includes four function keys and a LCD display, indicating the operating status and input/output power information.

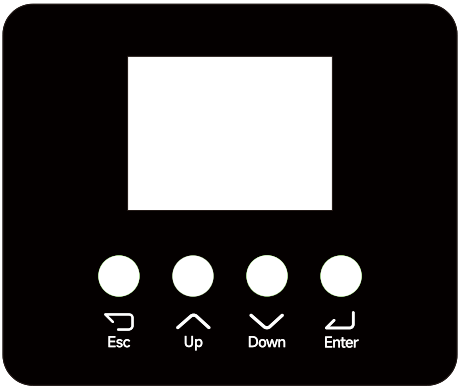

Function Key	*Description*
Esc	To exit setting mode
Up	To go to previous selection
Down	To go to next selection
Enter	To confirm the selection

Chart 4-2 Function Buttons

5. LCD Display Icons

5.1 Main Screen

The LCD is a touchscreen, below screen shows the overall information of the inverter.

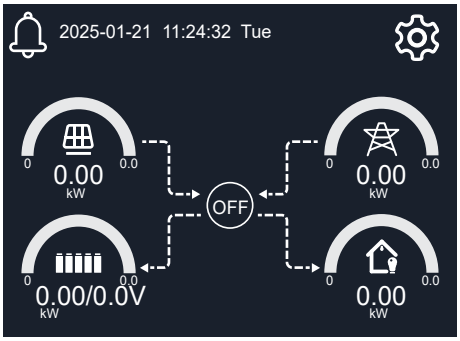

1. The icon at the center of the screen indicates whether the system is under normal operation or not, displaying “ON” for normal status or displaying a code like “Comm./F01-F64” for communication errors or other errors. Please refer to the Error code list of alarms and errors in chapter 8 to find out solutions about the error.

2. At the top-center of the screen is the date and local time that must be set during commissioning.

3. Click on the gear icon in the upper right corner of the screen to enter the “Setting” page which includes Basic Setup, Battery Setup, Grid Setup, Gen PORT USE, Work Mode and Advanced Function.

4. The main screen includes the icons for PV(left up), grid (right up), battery (left bottom), load (right bottom) and alarm(up left corner). It also displays the energy flow direction by moving dots. As the power increasing, the color bar will become longer and deeper, showing vividly the system status on the main screen.

Some clarifications about the system status are as follows:
· PV power will always be positive.
· Usually the load power is positive, but in some specifical scenerios,such as several inverters connnected in parallel, the load power may be negative.
· Grid power will always be positive.
· Negative battery power means charge, positive means discharge.

5.1.1 LCD operation flow chart

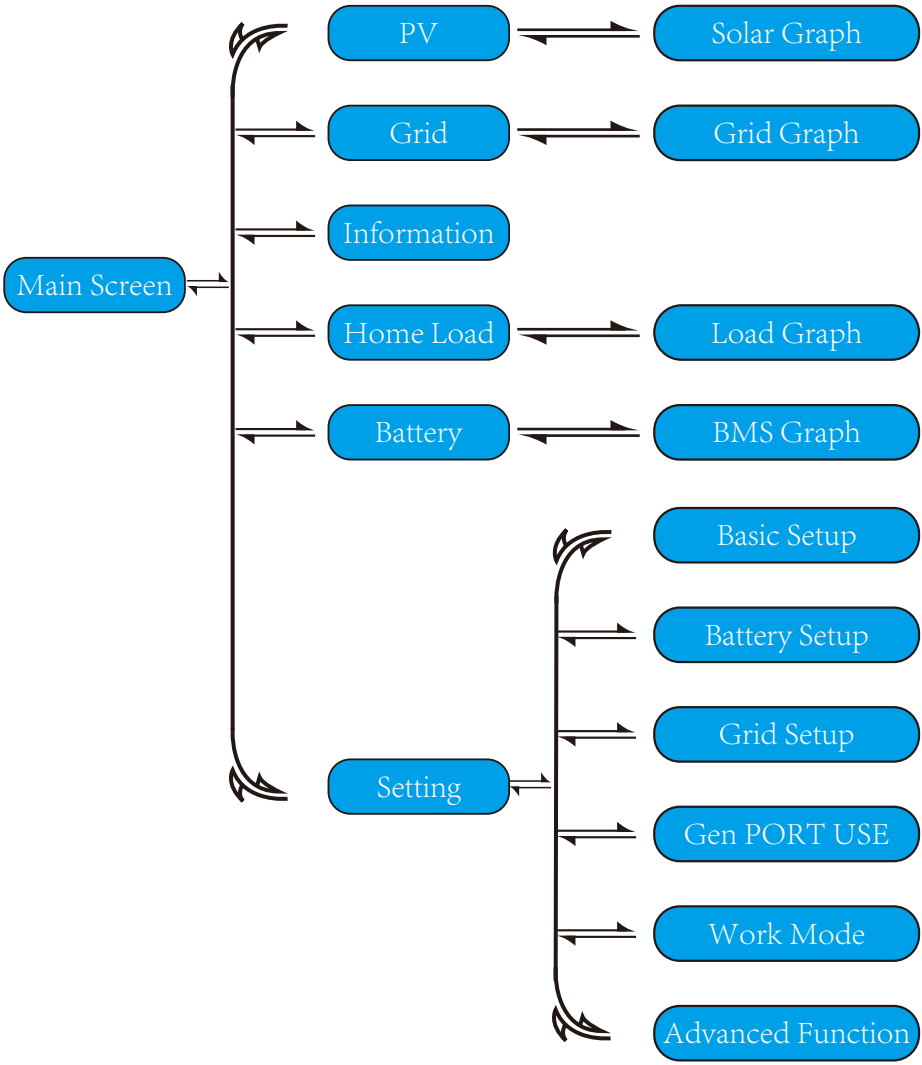

5.2 Solar Power Curve

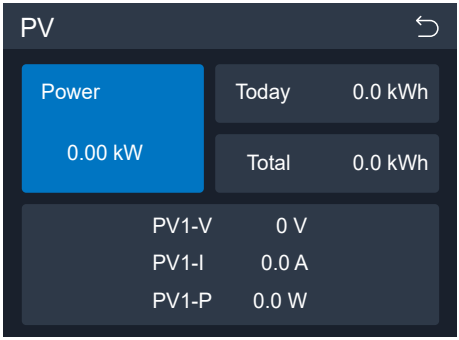

This is Solar Panel detail page.

Power: Current solar panel generation power.

Today/Total: Today's and total generation energy.

Voltage, Curren, Power of each MPPT at current time.

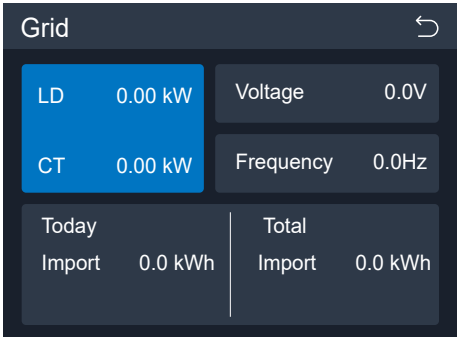

This is Grid detail page.

LD: Power detected by internal sensors on AC grid input port.
CT: Power detected by external current transformer or meter.
Voltage: The AC voltage of phase to line on the grid port at current time.
Frequency: The AC frequency on the grid port at current time.
Import: Today's and total import energy from grid to the inverter.

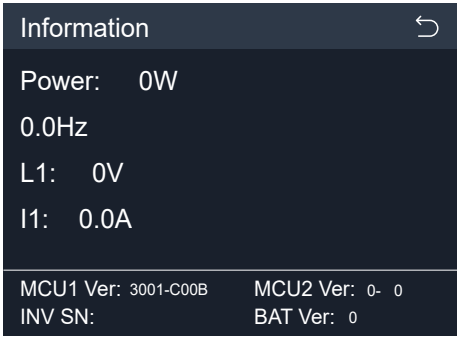

This is Inverter detail page.

Power: The power output of the inverter module.
0.0Hz: The frequency of the AC sine wave output by the inverter module.
L1/I1: The voltage and current of the AC power output by the inverter module.

MCU Ver/INV SN: The version information of firmware and the series number of inverter.

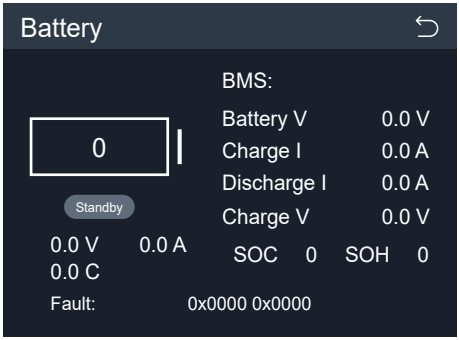

This is Battery detail page.

Battery V: The battery voltage uploaded by BMS.
Charge I: The charging current requested by BMS.
Discharge I: The discharging current requested by BMS.
Charge V: The charging voltage requested by BMS.
SOC: The SOC of battery uploaded by BMS.
SOH: The SOH of battery uploaded by BMS.
Standby: The operating status of battery.
0.0V 0.0A: The voltage and current of battery samplied by built-in sampling circuit of inverter.
Fault: The fault code of battery uploaded by BMS.

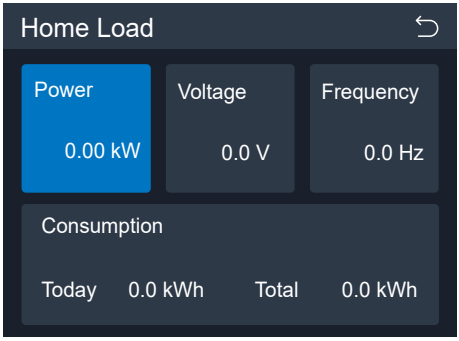

This is Load detail page.

Power: The power consumption of load at current time.
Voltage: The AC voltage on the load port of the inverter.
Frequency: The AC frequency on the load port of the inverter.
Consumption: Today's and total load consumption energy.

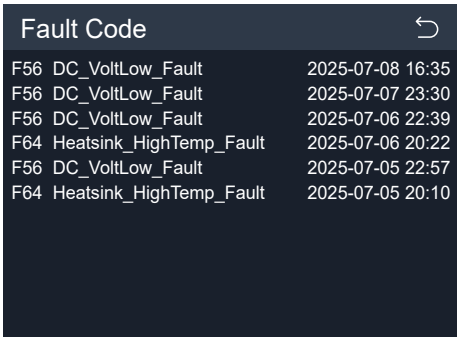

This is Fault Code page.

5.3 Setting Menu

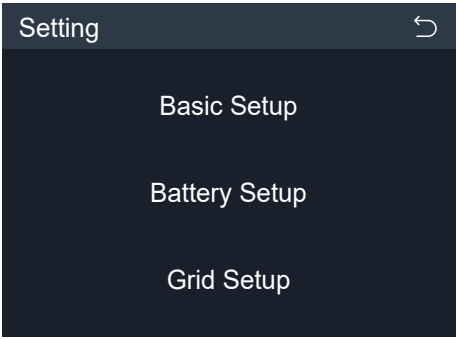

This is Setting page, including six items: Basic Setup, Battery Setup, Grid Setup, Gen PORT USE, Work Mode, Advanced Function.

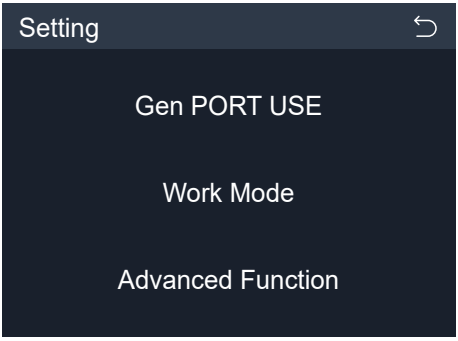

Swipe up and down on the screen to switch options.

5.4 Basic Setup Menu

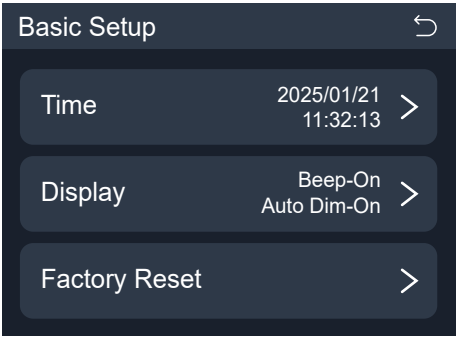

This is Basic Setup page.

Time: To set the local day and time for the inverter.
Display: To control the operating status of the buzzer and LCD screen.
Factory Reset: Reset all parameters of the inverter.

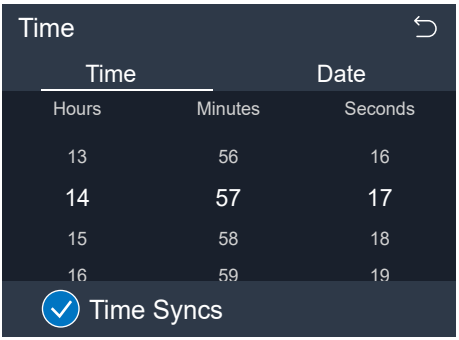

Swiping up and down on the screen can change the selected number to set the current time and date.
Time Syncs: After enabling, when the inverter is communicating with the cloud platform via data logger, the inverter will keep the time in sync with cloud platform automatically.

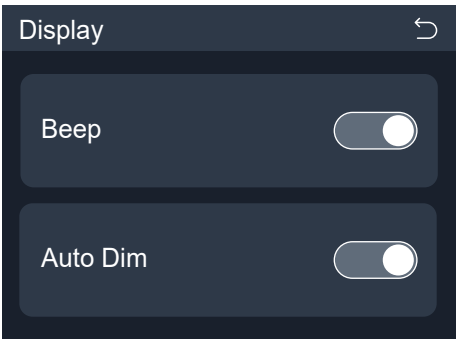

Beep: Whether or not enable the buzzer to sound during the faulty occuring.
Auto Dim: When it's enabled, the LCD screen will be dim automatically after 5 minutes of non-operation.

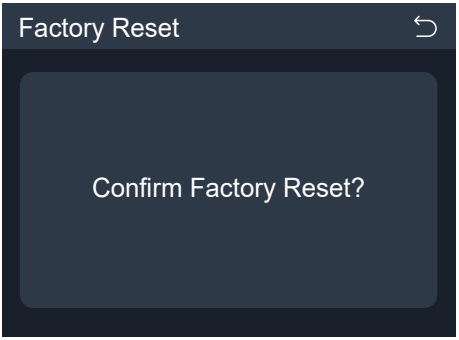

Click the “Factory Reset” option on“Basic Setup” page, the LCD screen will turn to this page, an you can press the “Enter” button to enter the verify page or press the “Esc” button to back to the previous page.

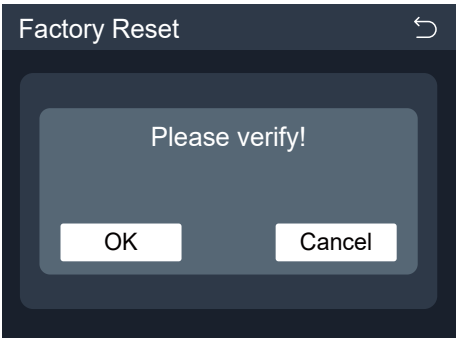

Click “OK” to confirm to restore all the settings of the inverter.
Click “Cancel” to quit to restore all the settings.

5.5 Battery Setup Menu

This is Battery Setup page.

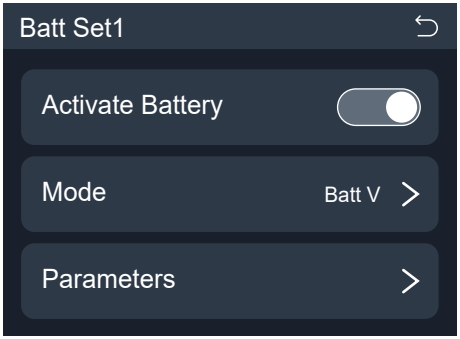

Activate battery: This feature will help recover a battery that is over discharged by slowly charging from the solar array or grid.

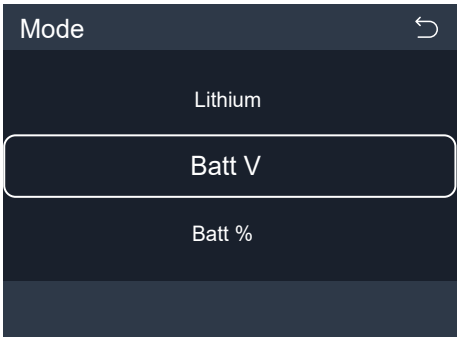

Lithium: Control the charging and discharging process of battery under the condition of the BMS of battery is communicating with the inverter.
Batt V: Control the charging and discharging process directly through battery voltage.
Batt %: In the absence of communication between the inverter and the battery, use the battery SOC calculated by the inverter to control the charging and discharging process of the battery.
No Battery: Tick this item if no battery is connected to the system.
You can press the “Enter” button to enter the verify page.

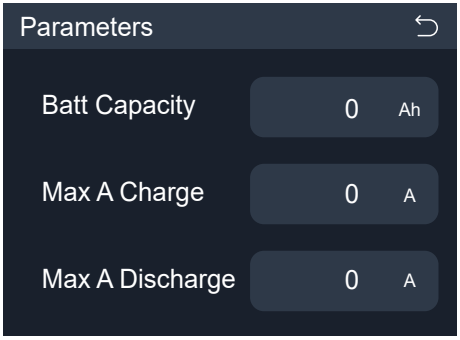

Batt Capacity: The total capacity of battery connected to this system, it can be used to calculated the SOC of battery bank under the "Use AGM %" mode.
Max A Charge/Discharge: Max battery charging/discharging current.
For AGM and Flooded, we recommend Ah battery size x 20%= Charge/Discharge amps.
. For Lithium, we recommend Ah battery size x 50% = Charge/Discharge amps.
. For Gel, follow manufacturer's instructions.

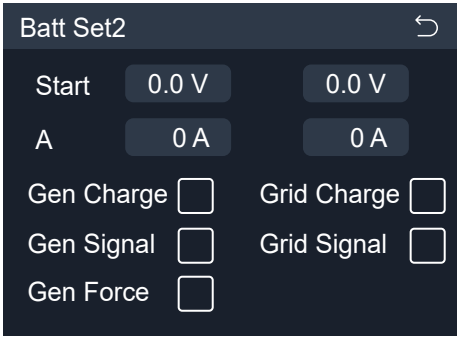

The parameters(expect Gen Force) on left row are valid when it's going to use AC power from the GEN port to charge the battery, and the parameters on right row are valid when it's going to use AC power from the Grid port to charge the battery.
Start: When battery SOC or voltage drops to this set value, the inverter will autostart the connected generator to charge the battery.
A: The maximum charging current allowed when only use AC power from the GEN port to charge the battery.
Gen Charge: Use the AC input power of GEN port to charge the battery.
Gen Signal: When conditions are sufficient, the inverter will close or open the normally open relay used to control the start and stop of the generator.

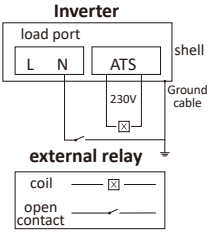

When “Gen Charge” and “Gen Signal” are enabled and the inverter operates in on-grid mode, the output voltage of the ATS port will be near 0V. When “Gen Charge” and “Gen Signal” are enabled and the inverter operates in off-grid mode, the ATS port will output near 230V. With this feature and installed external NO type relay, this inverter can automatically disconnect or connect the N and PE terminals of the Load port. More details, please refer to left side picture.
Gen Force: When the generator is connected, it is forced to start the generator without meeting other conditions.
Start: When battery SOC or voltage drops to this set value, the inverter will autostart the connected generator to charge the battery.
A: The maximum charging current allowed when only use AC power from the grid port to charge the battery.
Grid Charge: It's allowed to absorb AC power from the grid port to charge the battery.
Grid Signal: When a generator is connected to the grid port of hybrid inverter, this “Grid signal” can be used to control the dry contact to start or stop the generator.

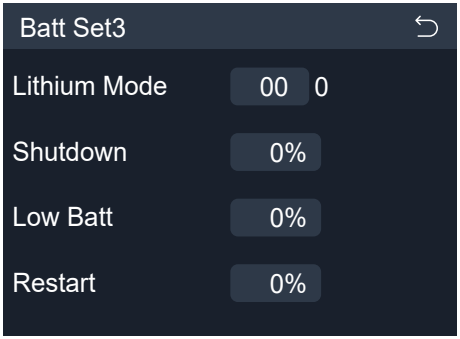

When the “Lithium” mode is selected, the content on the “Batt Set3” page is shown as the figure on the left.
Lithium Mode: This is the BMS communication protocol code which can be confirmed on the “Approved Battery list” based on the battery model you are using.
Shutdown: Be valid in off-grid mode, battery can discharge to this SOC, then the DC/AC inverter module of this inverter will be shut down and the solar power can only be used to charge the battery.
Low Batt: Be valid in on-grid mode, when the “Grid charge” has been checked , the battery SOC will remain above the set value of “Low Batt”.
Restart: Be valid in off-grid mode, after the DC/AC inverter module of this inverter is shut down, the PV power can only be used to charge the battery. After the battery SOC has resumed to this “Restart” value, the DC/AC inverter module will restart to output AC power.

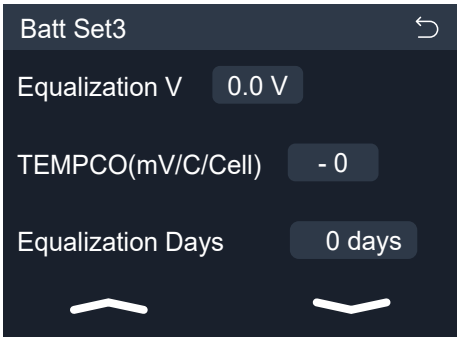

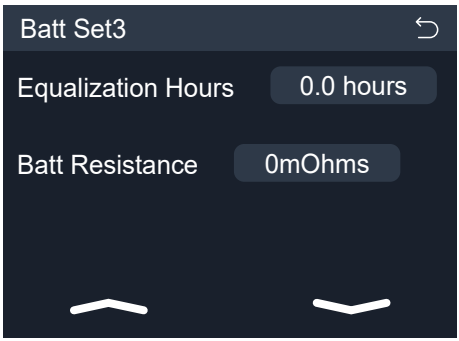

When the “Batt V” or “Batt %” mode is selected, the content on the “Batt Set3” page is shown as the figure on the left.

Three stage charging strategy for lead-acid and imcompatible lithium battery.
If you are not familiar with these parameters, please keep the default values.

Float V: The charging voltage during floating charging stage.
Shutdown: Be valid in off-grid mode, when battery SOC/voltage drop to this value, then the DC/AC inverter module of this inverter will be shut down and the solar power can only be used to charge the battery.
Absorption V: The charging voltage during absorption charging stage.
Low Batt: Be valid in on-grid mode, when the “Grid charge” has been checked, the battery SOC/voltage will remain above the set value of “Low Batt”.
Restart: Be valid in off-grid mode, after the DC/AC inverter module of this inverter is shut down, the PV power can only be used to charge the battery. When the battery SOC has returned to this “Restart” value, the DC/AC inverter module will restart to output AC power.
Equalization V: When charging multiple battery modules or cells in series, the set charging voltage to ensure that the voltage of each battery module or cell is equal after fully charged.
TEMPCO: The coefficient by which the voltage of a battery varies with temperature.
Equalization Days: Time interval for conducting equalization charging.

Equalization Hours: The duration of each equalization charging.
Batt Resistance: The internal resistance of a battery refers to the resistance experienced by the current flowing through its interior during operation.

Recommended battery settings

Battery Type	*Absorption Stage*	*Float Stage*	*Equalization Voltage (every 30 days 3hr)*
AGM (or PCC)	14.2V (57.6V)	13.4V (53.6V)	14.2V (57.6V)
Gel	14.1V (56.4V)	13.5V (54.0V)	
Wet	14.7V (59.0V)	13.7V (55.0V)	14.7V (59.0V)
Lithium	Follow its BMS voltage parameters		

5.6 Grid Setup Menu

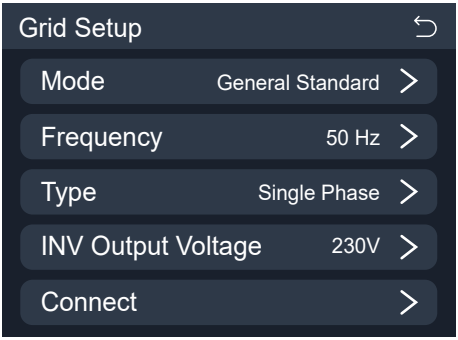

Mode: General Standard, UL1741 & IEEE1547, CPUC RULE21, SRD-UL-1741, CEI 0-21, EN50549_CZ, Australia_A, Australia_B, Australia_C, AS4777_NewZealand, VDE4105, OVE_Directive_R25, EN50549_CZ_PPDS_L16A, NRS097, G98/G99, G98/G99_NI, ESB Networks(Ireland), C10/11. Please follow the local grid code and then choose the corresponding grid standard.
Frequency: The frequency of the grid in on-grid mode, or the output frequency of the inverter in off-grid mode.

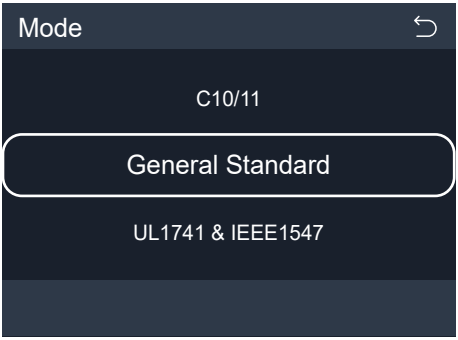

Slide up and down the optional standards on the screen to choose the corresponding grid standard following the requirement of grid supplier.

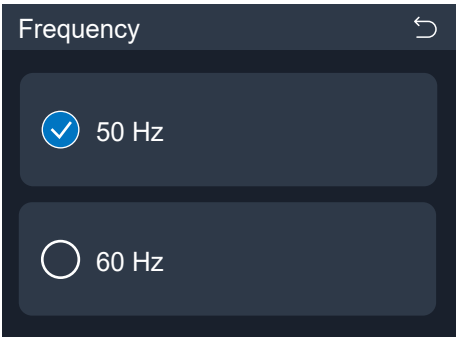

Set according to the grid frequency in on-grid mode or frequency required by load in off-grid mode.

To choose the wiring type of the inverter. Currently, only single-phase wiring is supported for use.

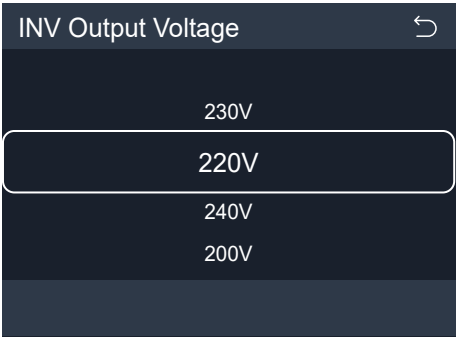

To set the rated output voltage of the inverter.

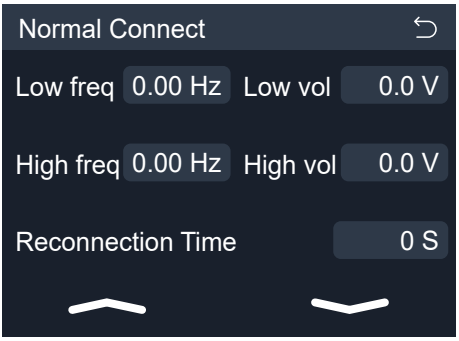

Reconnection Time: The waiting time for the inverter reconnects to the grid when the grid voltage/ frequency return to the allowed range after tripping.

5.7 Gen PORT USE Setup Menu

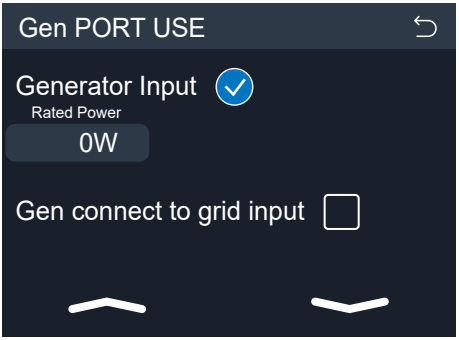

GEN port is a multifunctional port, but you can only choose one of the following two functions at a time (Generator Input, SmartLoad Output).

Generator Input Rated Power: The maximum input power allowed from generator.
Gen connect to grid input: Connect the generator to the grid input port of the the inverter.

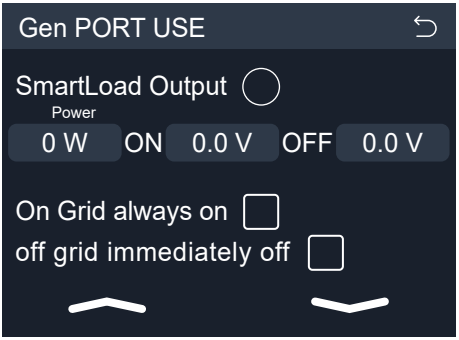

SmartLoad Output: Use the GEN port as an AC output port, and the load connected to this port can be controlled on/off by the hybrid inverter. e.g. Power=500W, ON: 100%, OFF=95%: When the PV power exceeds 500W, and battery bank SOC reaches 100%, Smart Load Port will switch on automatically and power the load connected. When the battery bank SOC < 95% or PV power < 500W, the Smart Load Port will switch off automatically.
On Grid always on: When click "on Grid always on" the smart load will switch on when the grid is present.
off grid immediately off: The smart load will stop working immediately when the grid is disconnected if this item is active.

5.8 Work Mode Setup Menu

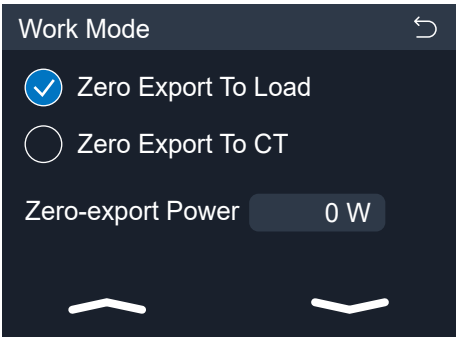

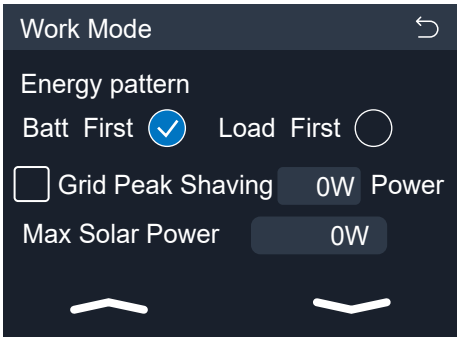

Zero Export To Load: The AC output power will only supply the backup load and smart load(if any). The Inverter will neither supply power to home loads nor sell power to the grid. The built-in CT will detect the power flowing back to the grid port, and then the inverter will adjust its AC output power based on the detected value to prevent AC current from being output from the grid port of the inverter.

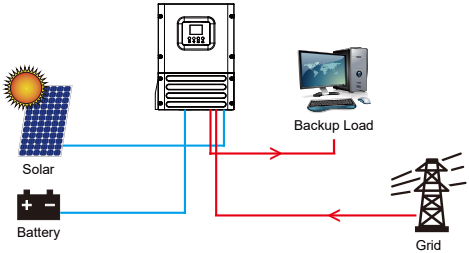

Zero Export To CT: The AC output power of the inverter will not only be used to supply the backup loads connected but also supply power to the home loads and smart loads(if any) connected. If PV power and battery power is insufficient, it will take grid power as supplement. The inverter will not sell power to grid. In this mode, an external CT/meter is needed, the external CT/meter will detect power flowing back to the grid, and then the inverter will adjust its output AC power based on the detected value.

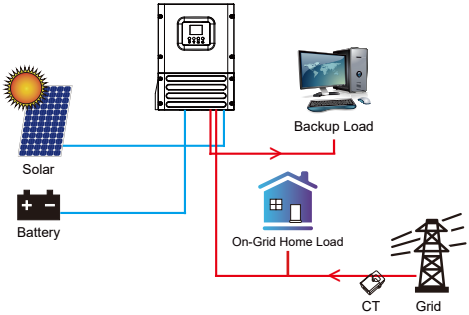

Zero-export Power: This parameter will ensure the zero-export by taking from the grid some small amount of energy that has been set with this value. It is recommended to set it as 20-100W to ensure the inverter won't feed power to grid.
Energy pattern: Priority of PV power usage. When “Grid charge” is enabled, the default energy pattern is “Load First”, this setting will be invalid.
Batt First: PV power is firstly used to charge the battery and then used to power the load. If PV power is insufficient, grid will make supplement for battery and load simultaneously.
Load First: PV power is firstly used to power the load and then used to charge the battery. If PV power is insufficient, grid will make supplement for battery and load simultaneously.
Grid Peak Shaving: When it is active, the inverter will attempt to limit the AC power obtained from the grid to this set value. If the grid peak shaving power plus PV power plus battery power cannot meet the power consumption of the load, the grid peak shaving will be invalid, and the power taken from the grid can exceed this set value.
Max Solar Power: The maximum DC input power allowed.

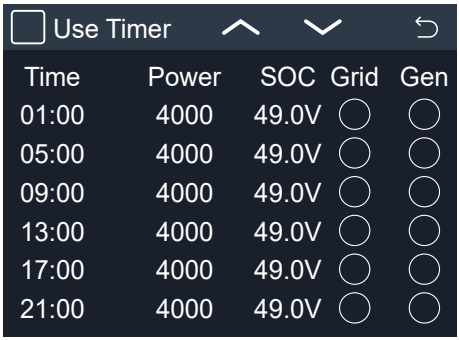

Use Timer: it is used to program when to use grid or generator to charge the battery, and when to discharge the battery to power the load. Only tick "Use Timer" then the follow items (Time, Power, SOC, Grid, Gen etc.) will take effect.
Note: when in selling first mode and click Use Timer, the battery power can be sold into grid.
Time: real time, range of 00:00-23:55.
Power: Max. charging/discharging power of battery allowed.
SOC: The target value of battery voltage or SOC during the current time period. If the actual SOC or voltage of the battery is lower than this target value, the battery needs to be charged. If there is a energy source like solar power or grid, the battery will be charged; If the actual SOC or voltage of the battery is higher than this target value, the battery can discharge, and when the solar power is not enough to power the load, the battery will discharge.
Grid: utilize grid to charge the battery in a time period.
Gen: utilize diesel generator to charge the battery in a time period.

5.9 Advanced Function Setup Menu

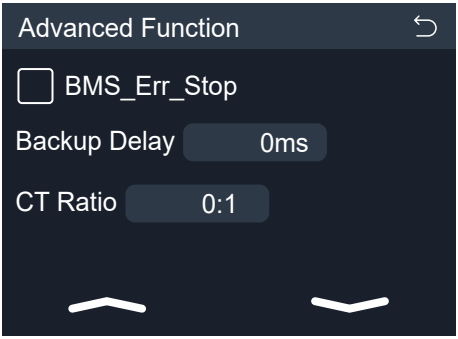

BMS_Err_Stop: When it is active, if the battery BMS failed to communicate with inverter, the inverter will stop working and report fault.
Backup Delay: When the grid cuts off, the inverter will output power after this set time.
CT Ratio: The ratio of CT rated primary current to rated secondary current.

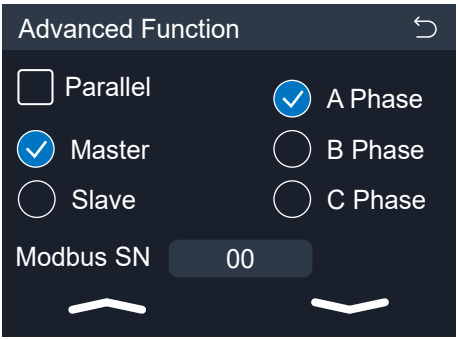

Parallel: Enable this function when several same model hybrid inverters are connecting in parallel.
Master: Select any hybrid inverter in the parallel systemas the master inverter, and the master inverter needs to manage the working mode of the parallel system.
Slave: Set the other inverters managed by the master inverter as slave inverter.
Modbus SN: The Modbus address of each inverter, should be different
A/B/C Phase: When forming a 3-phase system in parallel, it is necessary to set which phase of the three-phase system this inverter belongs to.

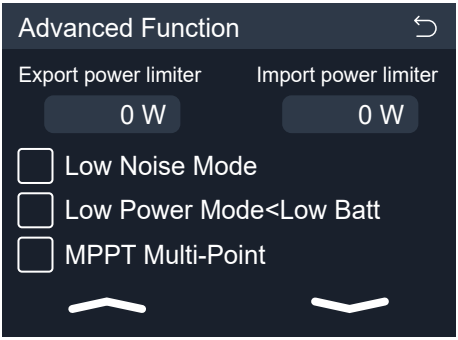

Export power limter: Invalid.
Import power limiter: when it is active, the import power from grid will be limited. its priority is lower then “grid peak shaving” if the “grid peak shaving” is selected.

Low Noise Mode: In this mode, the sound emitted by the inverter during operation will be smaller.
Low Power Mode<Low Batt: When it's selected and battery SOC is less than “Low Bat” value, the self-consumption power of inverter will supply by grid and battery simultaneously. If unselected, the self-consumption power of inverter will supply by battery.
MPPT Multi-Point: The inverter will check whether the PV is working on its Max. power point. If not, then it will adjust the voltage of MPPT to ensure the PV operates at the Max.power point.

6. Mode

Mode I: Zero export to Load

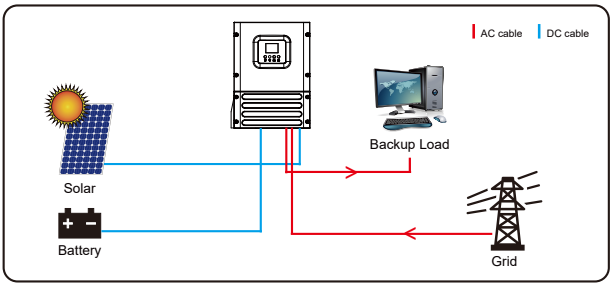

Mode II: Zero export to CT

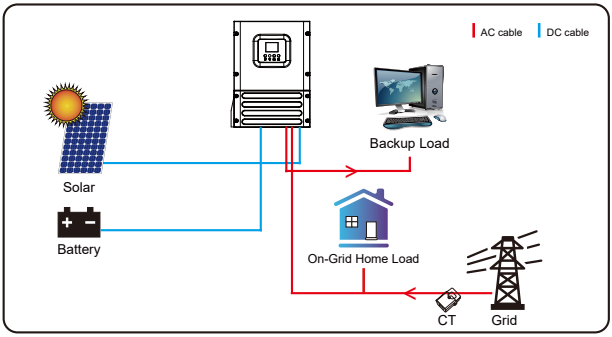

Mode III: Off-grid

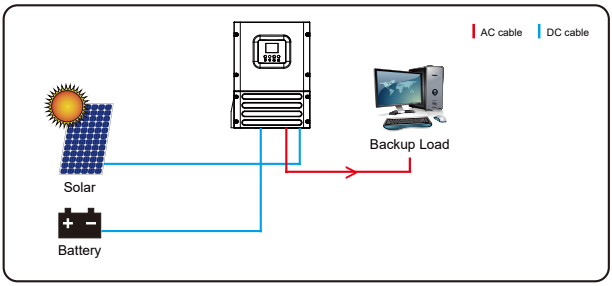

Mode IV: Off-grid with generator

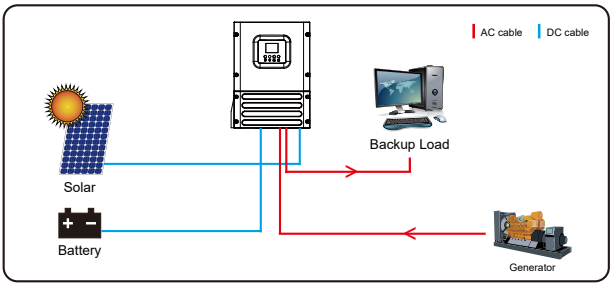

Mode V: On-grid with generator

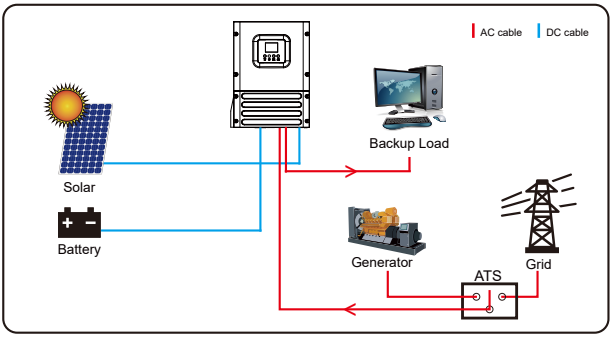

The 1st priority power of the system is always the PV power, then 2nd and 3rd priority power will be the battery bank or grid according to the settings. The last power backup will be the Generator (if any).

7. Fault information and processing

The energy storage inverter is designed according to the grid-connected operation standard and meets the safety requirements and electromagnetic compatibility requirements. Before leaving the factory, the inverter undergoes several rigorous tests to ensure that the inverter can operate reliably.

If any of the fault messages listed in Table 7-1 appear on your inverter and the fault has not been removed after restarting, please contact your local dealer or service center. You need to have the following information ready.

1. Inverter serial number;
2. Distributor or service center of the inverter ;
3. On-grid power generation date;
4. The problem description (including the fault code and indicator status displayed on the LCD) is as detailed as possible.
5. Your contact information.In order to give you a clearer understanding of the inverter's fault information, we will list all possible fault codes and their descriptions when the inverter is not working properly.

Error code	Description	Solutions
F08	GFDI _Relay_Failure	1. When inverter is in Split phase(120/240Vac) or three-phase system (120/208Vac) system, the backup load port N line needs to connect ground; 2. If the fault still exists, please contact us for help.
F13	Working mode change	1. When the grid type and frequency changed it will report F13; 2. When the battery mode was changed to "No battery" mode, it will report F13; 3. For some old FW version, it will report F13 when the system work mode changed; 4, Generally, it will disappear automatically when shows F13; 5. If still same, and turn off the DC switch and AC switch and wait for one minute and then turn on the DC/AC switch; 6. Seek help from us, if can not go back to normal state.
F18	AC over current fault of hardware	AC side over current fault 1. Please check whether the backup load power and common load power are within the range; 2. Restart and check whether it is in normal; 3. Seek help from us, if can not go back to normal state.
F20	DC over current fault of the hardware	DC side over current fault 1. Check PV module connect and battery connect; 2. When in the off-grid mode, the inverter startup with big power load, it may report F20. Please reduce the load power connected; 3. Turn off the DC switch and AC switch and then wait one minute,then turn on the DC/AC switch again; 4. Seek help from us, if can not go back to normal state.
F22	Tz_EmergStop_Fault	Please contact your installer for help.
F23	AC leakage current is transient over current	Leakage current fault 1. Check PV side cable ground connection. 2. Restart the system 2~3 times. 3. If the fault still exists, please contact us for help.
F24	DC insulation impedance failure	PV isolation resistance is too low 1. Check the connection of PV panels and inverter is firmly and correctly; 2. Check whether the PE cable of inverter is connected to ground; 3. Seek help from us, if can not go back to normal state.
F26	The DC busbar is unbalanced	1. Please wait for a while and check whether it is normal; 2. When the hybrid in split phase mode, and the load of L1 and load of L2 is big different, it will report the F26. 3. Restart the system 2~3 times. 4. Seek help from us, if can not go back to normal state.
F29	Parallel CANBus fault	1. When in parallel mode, check the parallel communication cable connection and inverter communication address setting; 2. During the parallel system startup period, inverters will report F29. when all inverters are in ON status, it will disappear automatically; 3. If the fault still exists, please contact us for help.

Error code	Description	Solutions
F34	AC Overcurrent fault	1. Check the backup load connected, make sure it is in allowed power range; 2. If the fault still exists, please contact us for help.
F35	No AC grid	No Utility 1. Please confirm grid is lost or not; 2. Check the grid connection is good or not; 3. Check the switch between inverter and grid is on or not; 4. Seek help from us, if can not go back to normal state.
F41	Parallel system stop	1. Check the inverter working status. If there's 1 pcs inverter is in OFF status, the other inverters may report F41 fault in parallel system. 2. If the fault still exists, please contact us for help.
F42	AC line low voltage	Grid voltage fault 1. Check the AC voltage is in the range of standard voltage in specification; 2. Check whether grid AC cables are firmly and correctly connected; 3. Seek help from us, if can not go back to normal state.
F47	AC over frequency	Grid frequency out of range 1. Check the frequency is in the range of specification or not; 2. Check whether AC cables are firmly and correctly connected; 3. Seek help from us, if can not go back to normal state.
F48	AC lower frequency	Grid frequency out of range 1. Check the frequency is in the range of specification or not; 2. Check whether AC cables are firmly and correctly connected; 3. Seek help from us, if can not go back to normal state.
F56	DC busbar voltage is too low	Battery voltage low 1. Check whether battery voltage is too low; 2. If the battery voltage is too low, using PV or grid to charge the battery; 3. Seek help from us, if can not go back to normal state.
F58	BMS communication fault	1. it tells the communication between inverter and battery BMS disconnected when"BMS_Err-Stop" is active; 2. if don't want to see this happen, you can disable "BMS_Err-Stop" item on the LCD; 3. If the fault still exists, please contact us for help.
F63	ARC fault	1. ARC fault detection is only for US market; 2. Check PV module cable connection and clear the fault; 3. Seek help from us, if can not go back to normal state.
F64	Heat sink high temperature failure	Heat sink temperature is too high 1. Check whether the work environment temperature is too high; 2. Turn off the inverter for 10mins and restart; 3. Seek help from us, if can not go back to normal state.

Chart 7-1 Fault information

Under the guidance of our company, customers return our products so that our company can provide service of maintenance or replacement of products of the same value. Customers need to pay the necessary freight and other related costs. Any replacement or repair of the product will cover the remaining warranty period of the product. If any part of the product or product is replaced by the company itself during the warranty period, all rights and interests of the replacement product or component belong to the company.
Factory warranty does not include damage due to the following reasons:

· Damage during transportation of equipment;
· Damage caused by incorrect installation or commissioning;
· Damage caused by failure to comply with operation instructions, installation instructions or maintenance instructions;
· Damage caused by attempts to modify, alter or repair products;
· Damage caused by incorrect use or operation;
· Damage caused by insufficient ventilation of equipment;
· Damage caused by failure to comply with applicable safety standards or regulations;
· Damage caused by natural disasters or force majeure (e.g. floods, lightning, overvoltage, storms, fires, etc.)

In addition, normal wear or any other failure will not affect the basic operation of the product. Any external scratches, stains or natural mechanical wear does not represent a defect in the product.

8.Limitation of Liability

In addition to the product warranty described above, the state and local laws and regulations provide financial compensation for the product's power connection (including violation of implied terms and warranties). The company hereby declares that the terms and conditions of the product and the policy cannot and can only legally exclude all liability within a limited scope.

9. Datasheet

Model	***SUN-3K-OG02LP1-24-EU-AM1***	***SUN-3K-OG02LP1-EU-AM1***	***SUN-3.6K-OG02LP1-EU-AM1***	***SUN-5K-OG02LP1-EU-AM1***	***SUN-6K-OG02LP1-EU-AM1***
Battery Input Data					
Battery Type	Lead-acid or Lithium-ion				
Battery Voltage Range(V)	20-30	40-60			
Max. Charging Current(A)	130	70	90	120	135
Max. Discharging Current(A)	130	70	90	120	135
Charging Strategy for Li-Ion Battery	Self-adaption to BMS				
Number of Battery Input	1				
PV String Input Data					
Max. PV access power(W)	6000	6000	7200	10000	12000
Max. PV Input Power(W)	4800	4800	5760	8000	9600
Max. PV Input Voltage(V)	450				
Start-up Voltage(V)	125				
PV Input Voltage Range(V)	125-450				
MPPT Voltage Range(V)	150-425				
Full Load MPPT Voltage Range(V)	300-425				
Rated PV Input Voltage(V)	370				
Max. Operating PV Input Current(A)	36				
Max. Input Short-Circuit Current(A)	54				
No. of MPP Trackers/No. of Strings MPP Tracker	1/1				
Max. Inverter Backfeed Current to The Array(A)	0				
AC Output Data					
Rated AC Output Power(VA/W)	3000	3000	3600	5000	6000
Max. AC Output Power(VA/W)	3000	3000	3600	5000	6000
Max. AC Output Current(A)	13.1	13.1	15.7	21.8	26.1
Peak Power(W)	2 times of rated power, 10s				
Rated Output Voltage(V)	230				
Output Type	L+N+PE				
Rated Output Frequency	50Hz/60Hz				
Output Voltage Waveform	Pure Sine Wave				
Total Current Harmonic Distortion THDi	<3%				
AC Input Data(Grid and Generator)					
Max. Input Power to Battery(W)	3000	3000	3600	5000	6000
Rated Input Voltage(V)	230				
Rated Input Frequency	50Hz/60Hz				
Grid Input Current(A)	35	35	35	35	35
Generator Input Current(A)	35	35	35	35	35
Efficiency					
Max. Efficiency	97.60%				
Euro Efficiency	96.50%				
MPPT Efficiency	>99%				

Equipment Protection	
DC reverse polarity protection	Yes
AC Output Overcurrent Protection	Yes
AC Output Overvoltage Protection	Yes
AC Output Short Circuit Protection	Yes
Thermal Protection	Yes
Insulation Impedance detection	Yes
DC Component Monitoring	Yes
Surge Protection Level	TYPE II(DC), TYPE II(AC)
Interface	
Display	LCD+LED
Communication Interface	RS485, CAN
Monitor Mode	WIFI(optional)
General Data	
Operating Temperature Range	-40 to +60℃, >45℃ Derating
Permissible Ambient Humidity	0-100%
Permissible Altitude	3000m
Noise	<46 dB
Ingress Protection(IP) Rating	IP 65
Inverter Topology	Non-Isolated
Over Voltage Category	OVC II(DC), OVC III(AC)
Cabinet size(W*H*D) [mm]	306W×427.5H×175.8D (Excluding connectors and brackets)
Weight(kg)	9.3
Warranty	5 Years/10 Years the Warranty Period Depends the Final Installation Site of Inverter, More Info Please Refer to Warranty Policy
Type of Cooling	Intelligent Air Cooling
Safety EMC/Standard	IEC62109-1/-2, EN61000-6-1,EN61000-6-2,EN61000-6-3,EN61000-6-4

10. Appendix I

Definition of RJ45 Port Pin for BMS

No.	BMS 485/CAN Pin
1	BMS-485_B
2	BMS-485_A
3	BMS-GND_485
4	CAN-H
5	CAN-L
6	BMS-GND_485
7	BMS-485_A
8	BMS-485_B

BMS 485/CAN Port

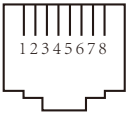

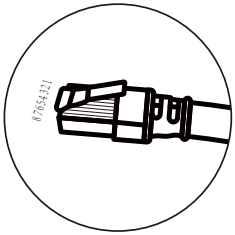

NINGBO DEYE INVERTER TECHNOLOGY CO., LTD.

Greenlike.biz